Haptic Mouse Board Master Sheet

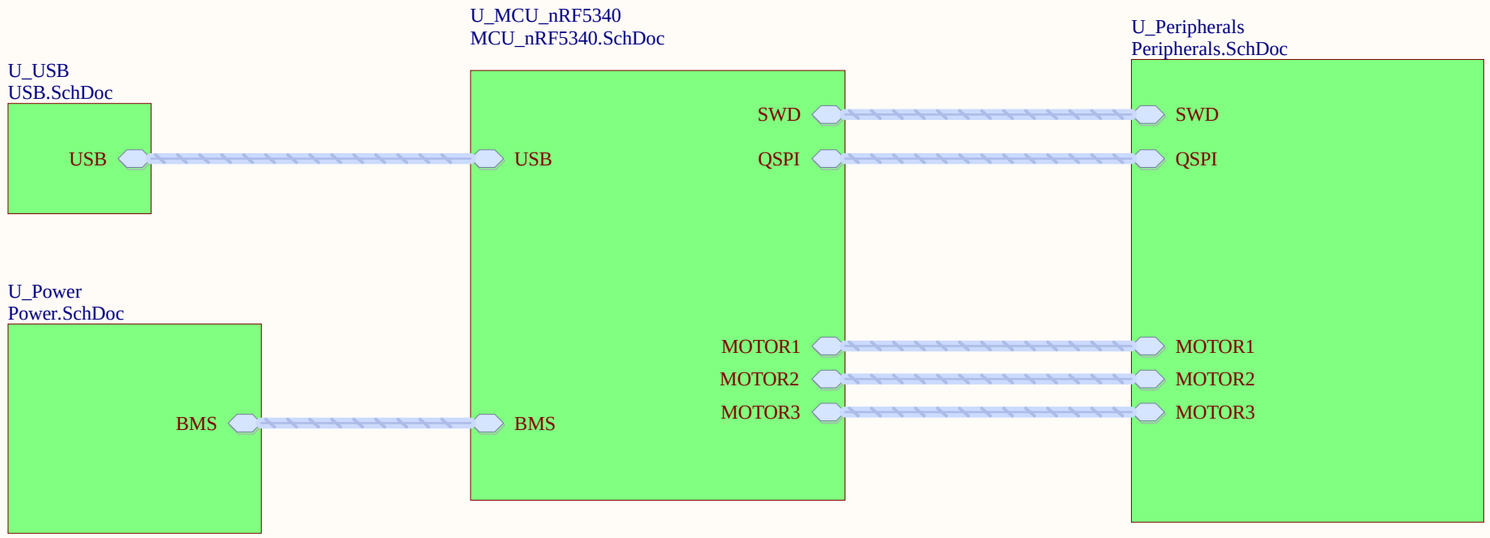

Title		
Size A4	Number	Revision
Date: 3-16-2026		Sheet of
File: D:\titan_haptics\..\MASTER.SchDoc		Drawn By:

nRF5340 NORA-B126-00B Module

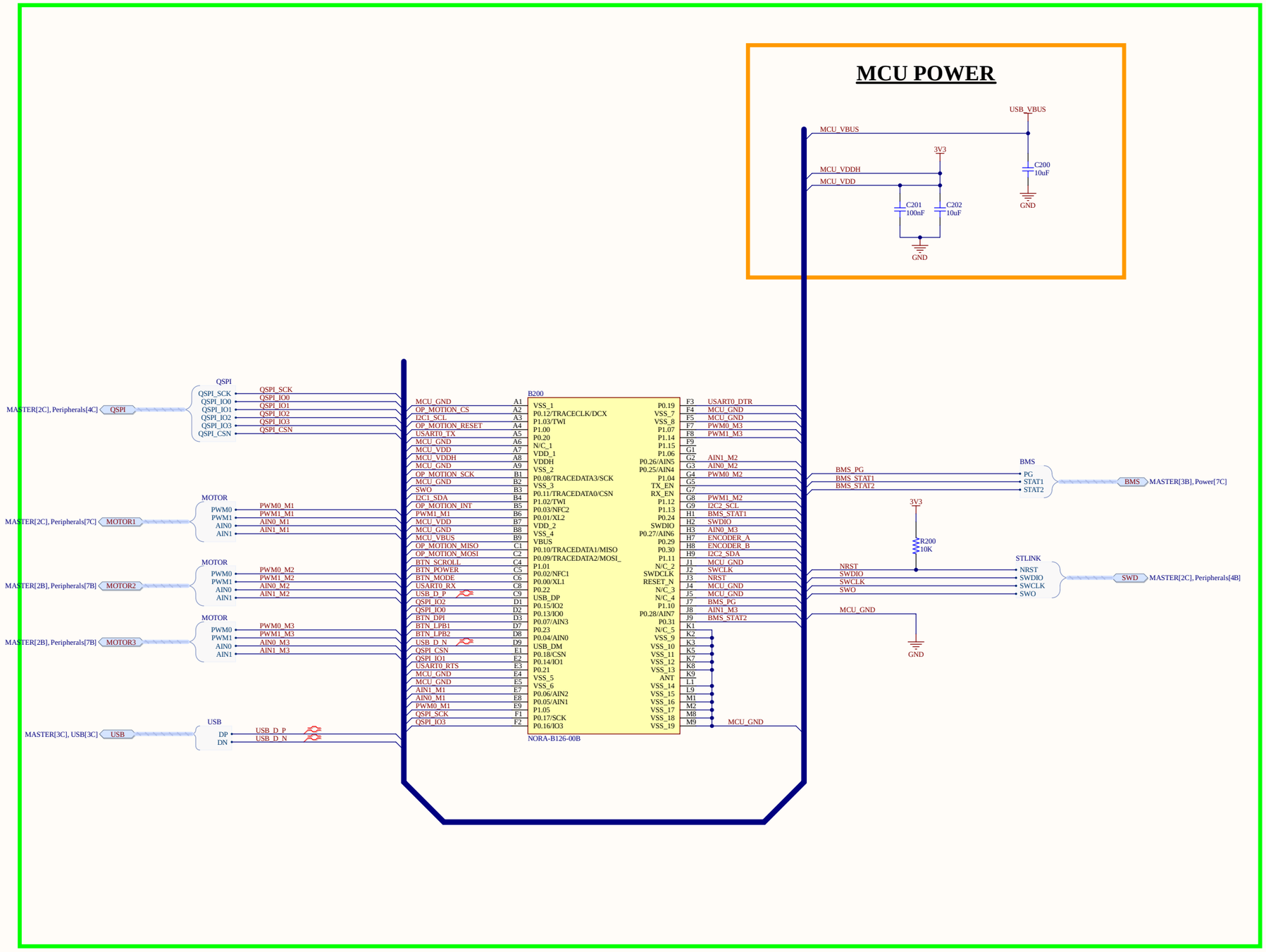

Title		
Size A2	Number	Revision
Date: 3-16-2026	Sheet of	
File: D:\titan_haptics\..\MCU_nRF5340.SchDoc	Drawn By:	

Peripherals Sheet

Haptic Motors

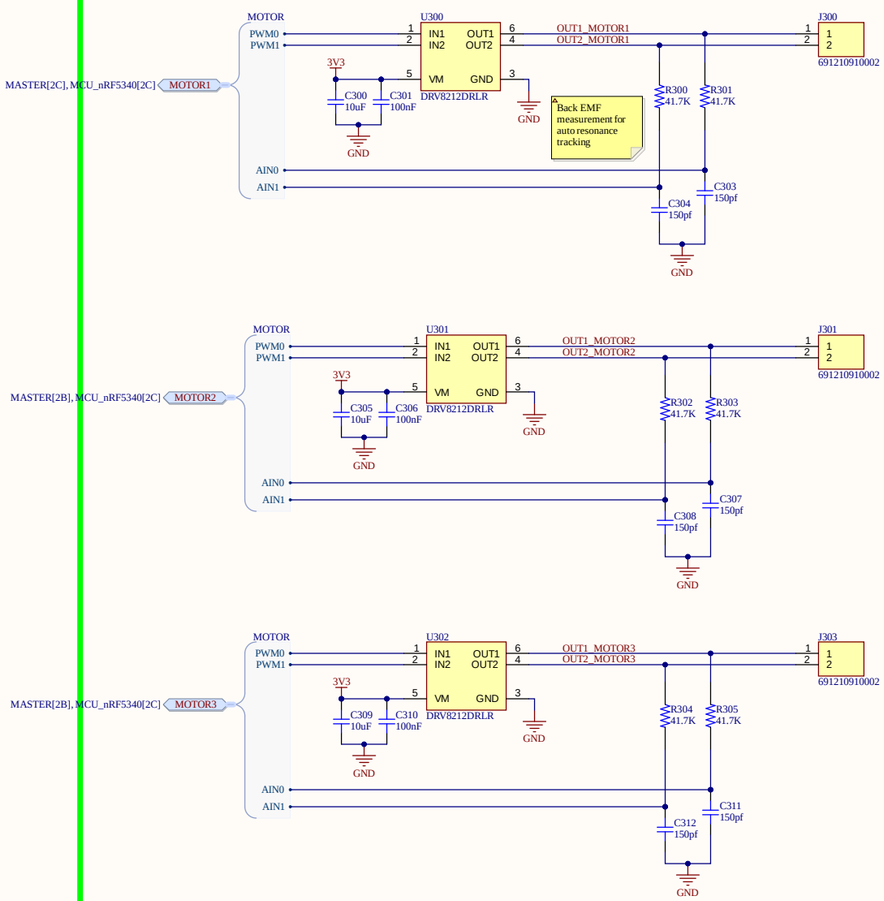

QSPI Flash

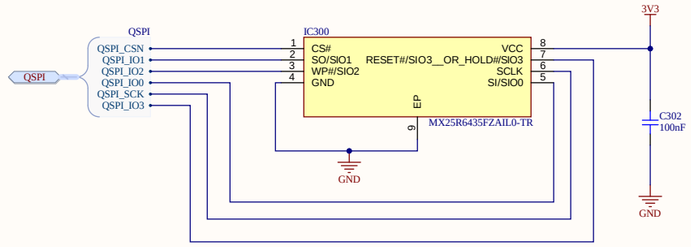

SWD Debugger Connector

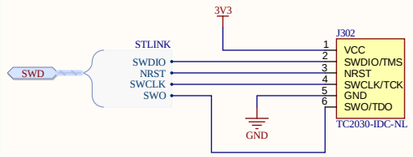

Title		
Size A2	Number	Revision
Date: 3-16-2026	Sheet of	
File: D:\titan_haptics\..\Peripherals.SchDoc	Drawn By:	

Power Supplies, Battery Charger & Switch

Power Path and Battery Charger

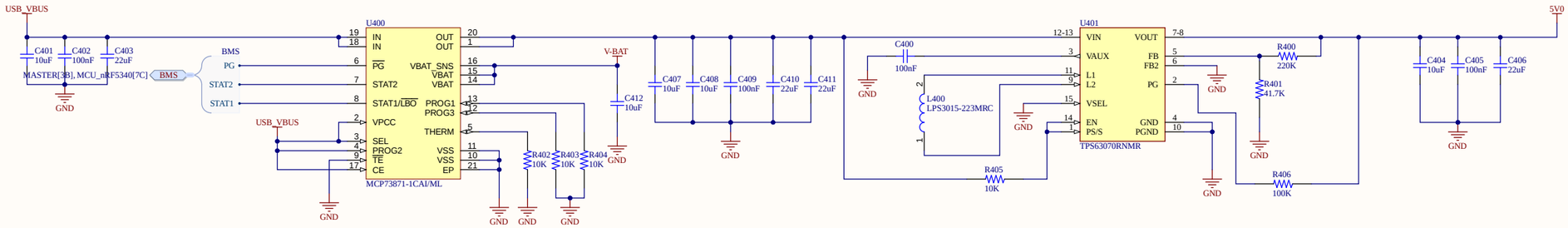

3V3 LDO

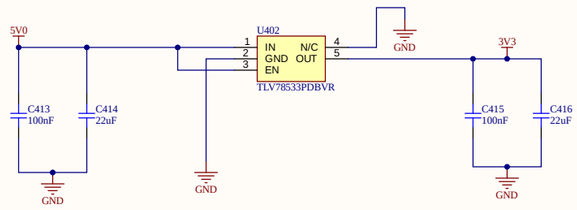

Battery Connector

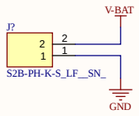

Title		
Size A2	Number	Revision
Date: 3-16-2026		Sheet of
File: D:\titan_haptics\...\Power.SchDoc		Drawn By:

USB Input & Protection

USB Connector

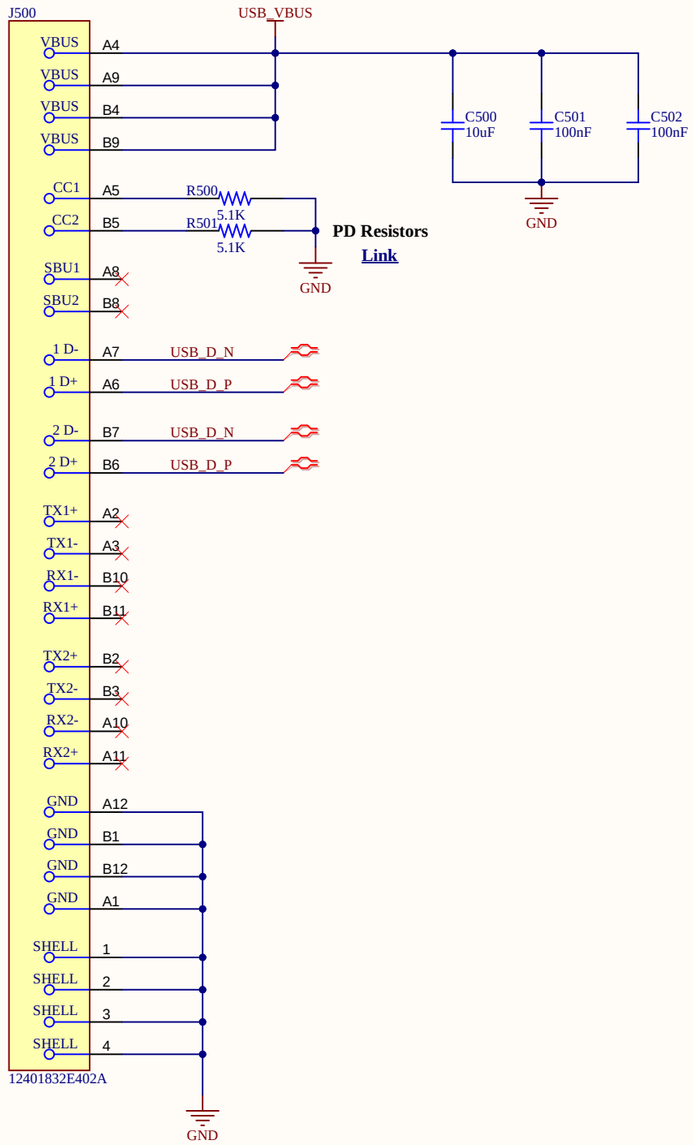

USB Data Ports

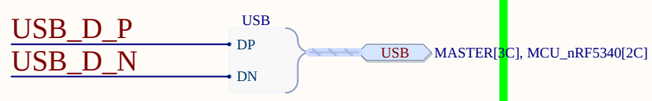

ESD Protection

DSIL6-4P6 Datasheet: Link

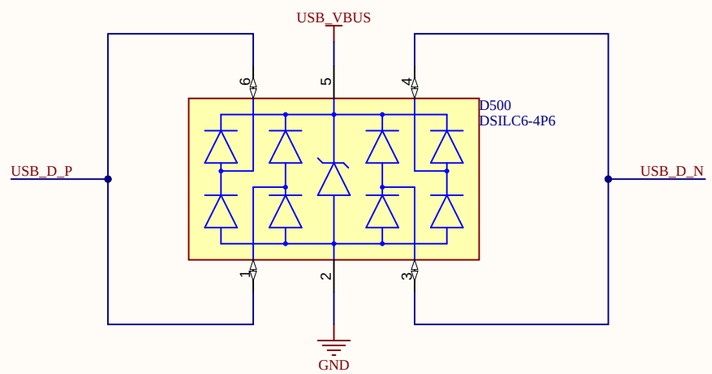

Title		
Size A3	Number	Revision
Date: 3-16-2026		Sheet of
File: D:\titan_haptics\..\USB.SchDoc		Drawn By: